Distributed algorithms for telecommunications network and service management

INSTITUT NATIONAL
DE RECHERCHE
EN INFORMATIQUE
ET EN AUTOMATIQUE

INRIA

A joint research with Alcatel and France-Telecom

Albert Benveniste, Eric Fabre, Stefan Haar, Claude Jard – IRISA

(Armen Aghasaryan – Alcatel, Christophe Dousson – FTR&D)

The diagnosis problem : distributed observation of the hidden state of a dynamical system

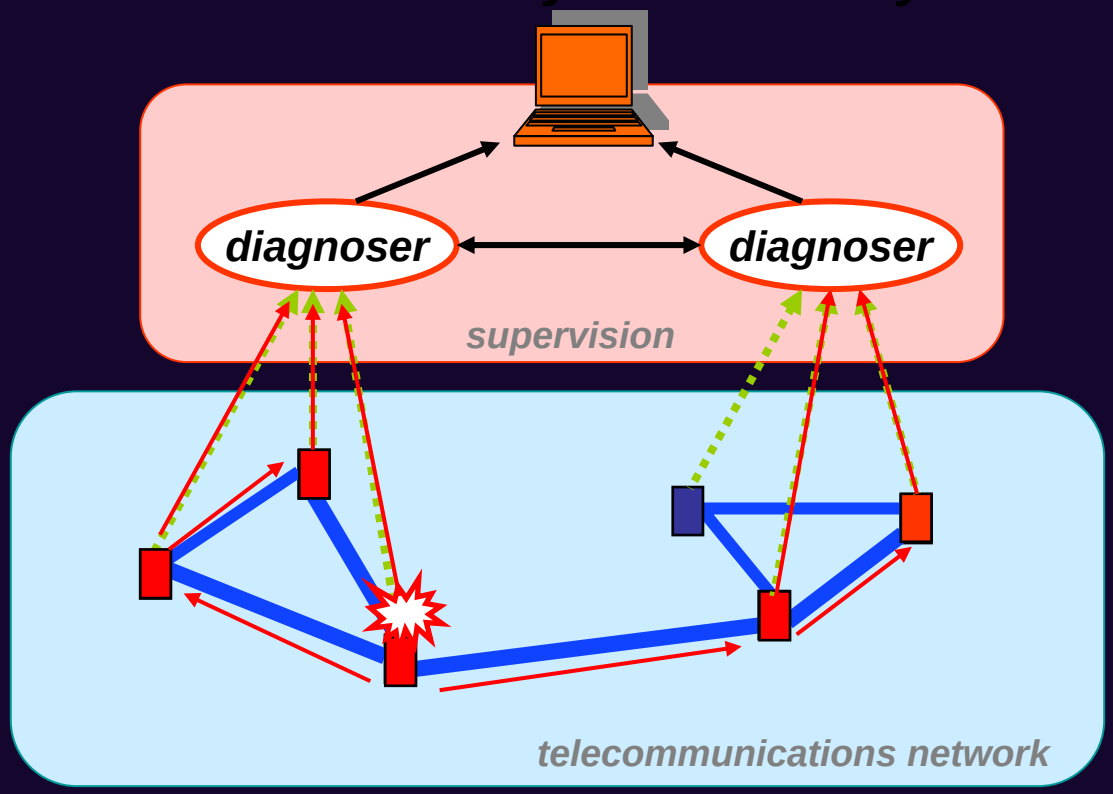

- Fault propagation – causality
- Alarm interleaving – concurrency
- Distributed processing

The diagnosis problem: distributed state inference from alarm observation ero;gie [wijjoij

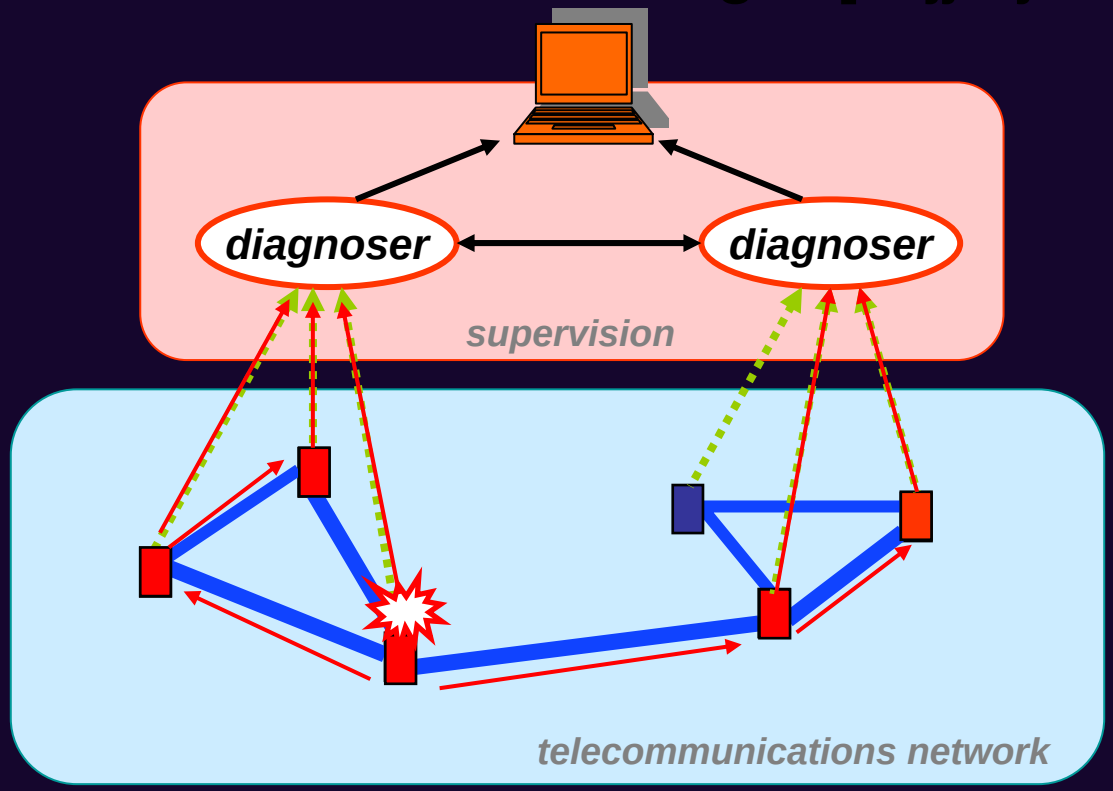

- Fault propagation – causality
- Alarm interleaving – concurrency
- Distributed processing

Example : *SDH/SONET optical ring nearby Paris*

Structural model (ITU-T…)

- physical network topology
- network elements
- connections model

Behavioral model

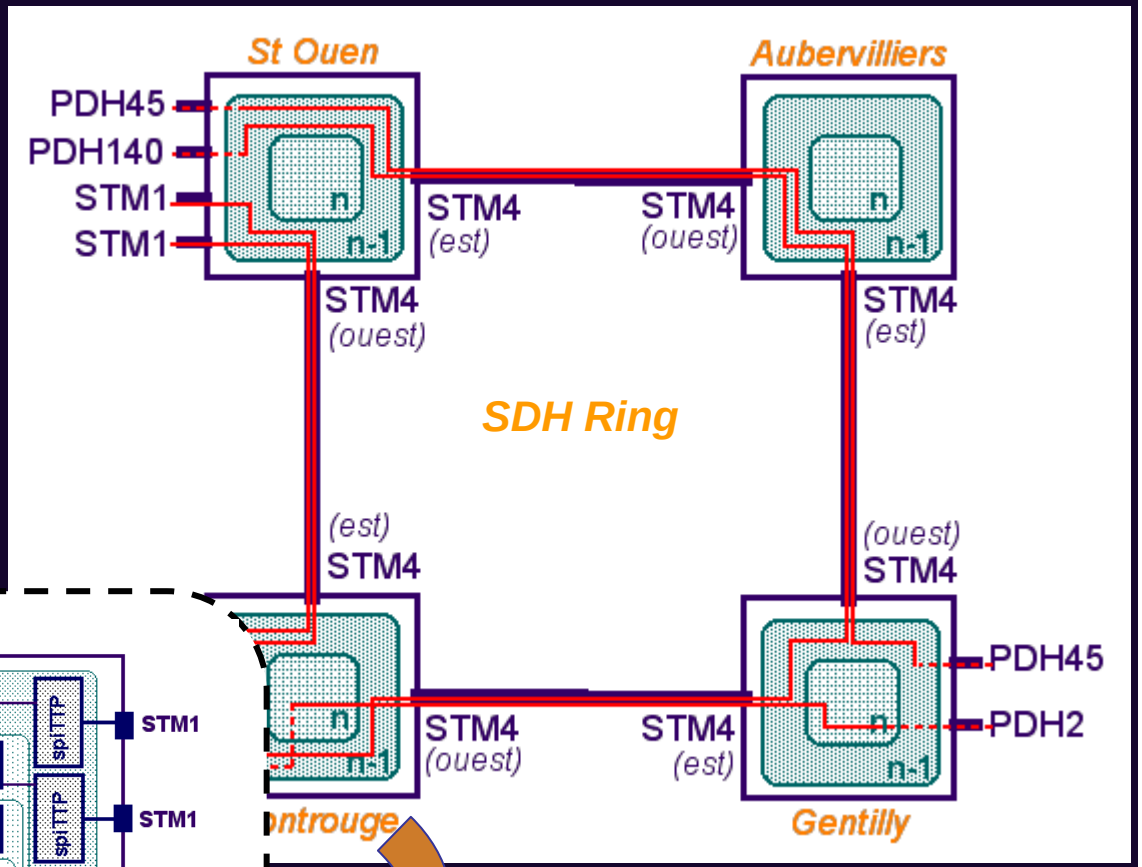

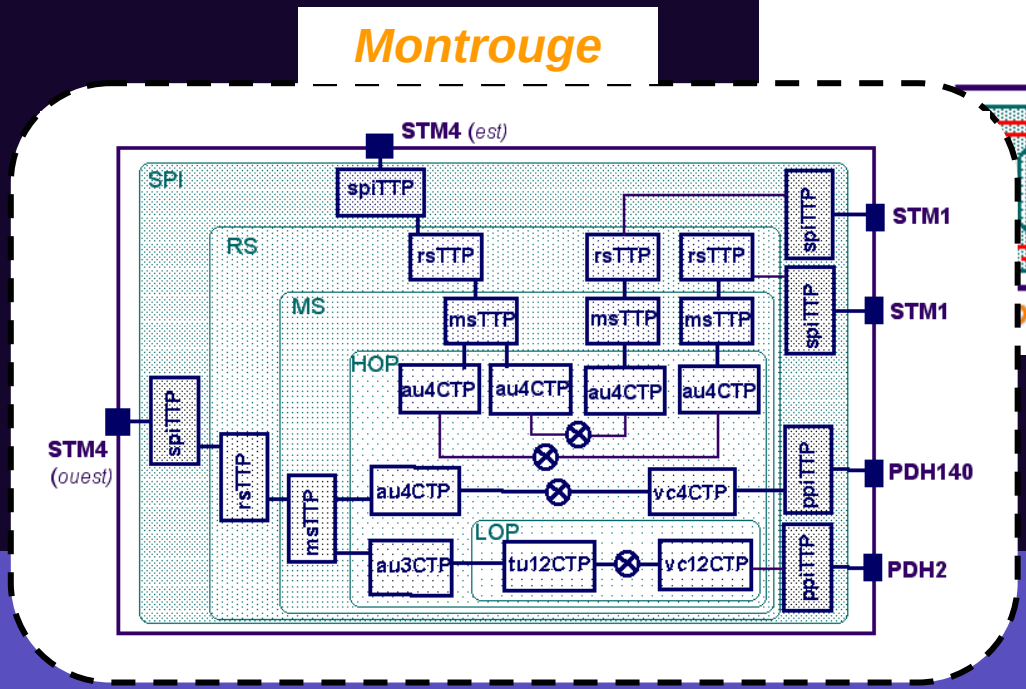

A typical fault propagation scenario

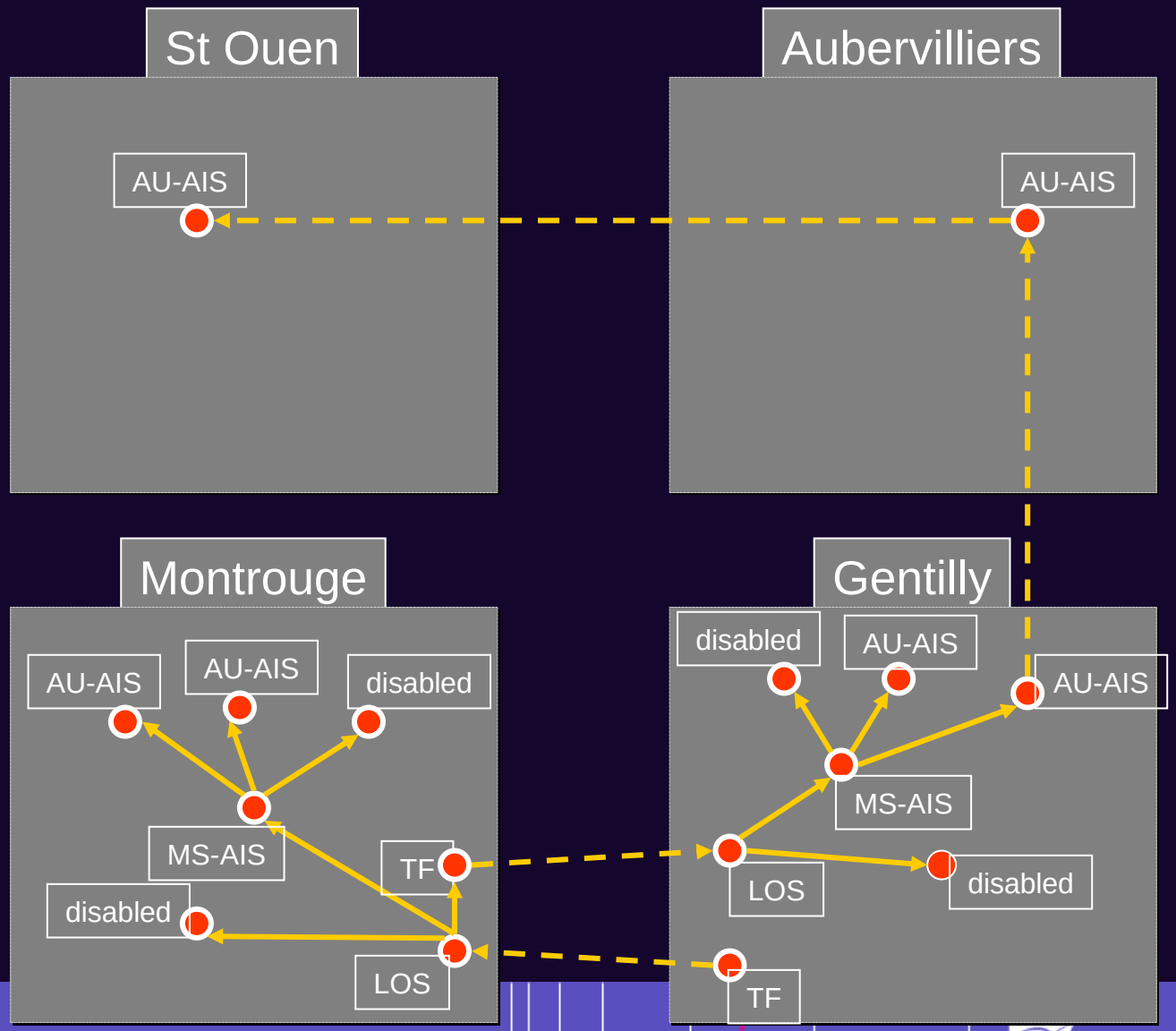

MPLS and SDH domains - impact analysis

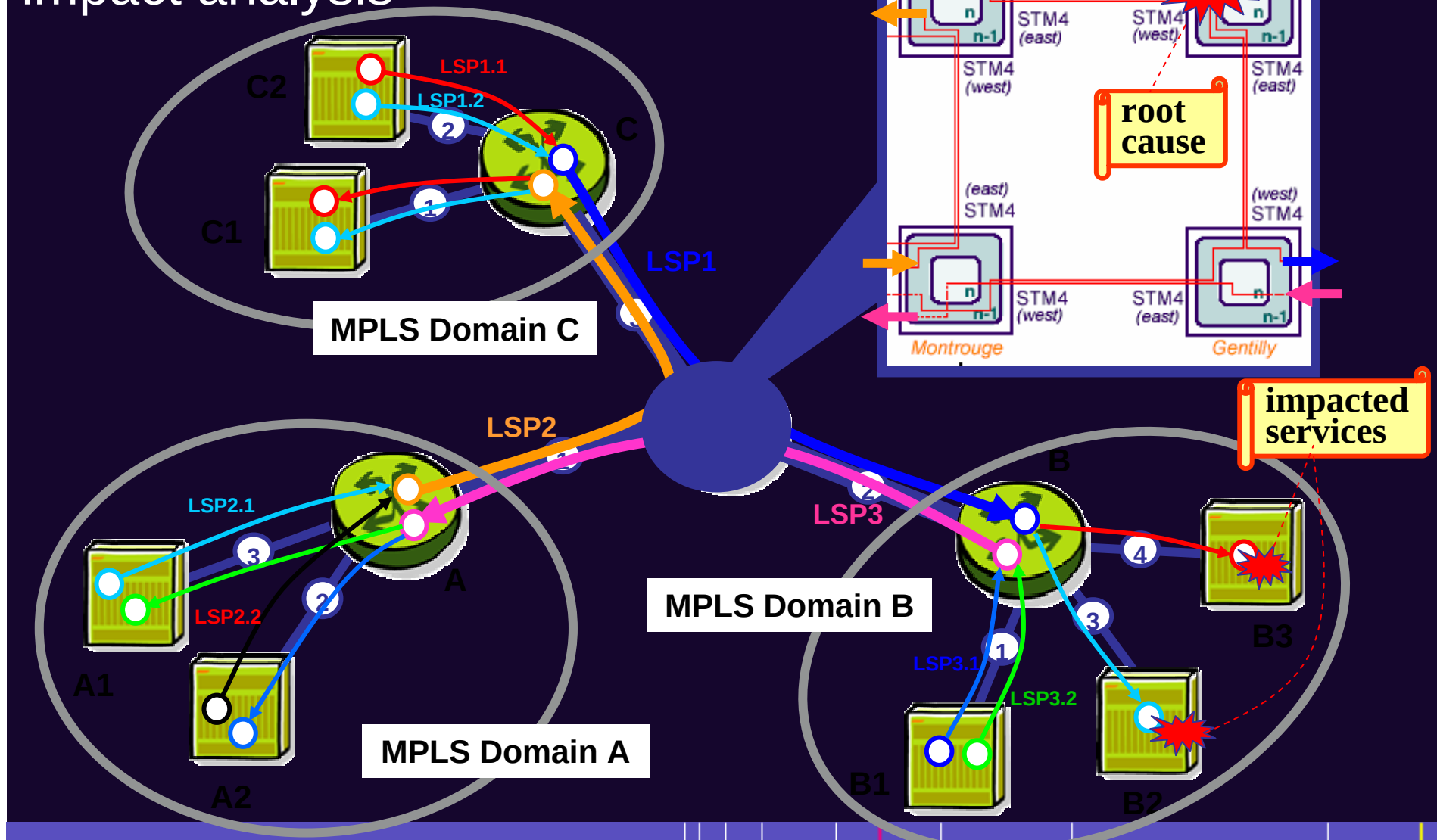

Model-based approach : *methodology*

Structural Model (ITU-T…)

- physical network topology
- network elements
- connections model

+ Behavioral Model

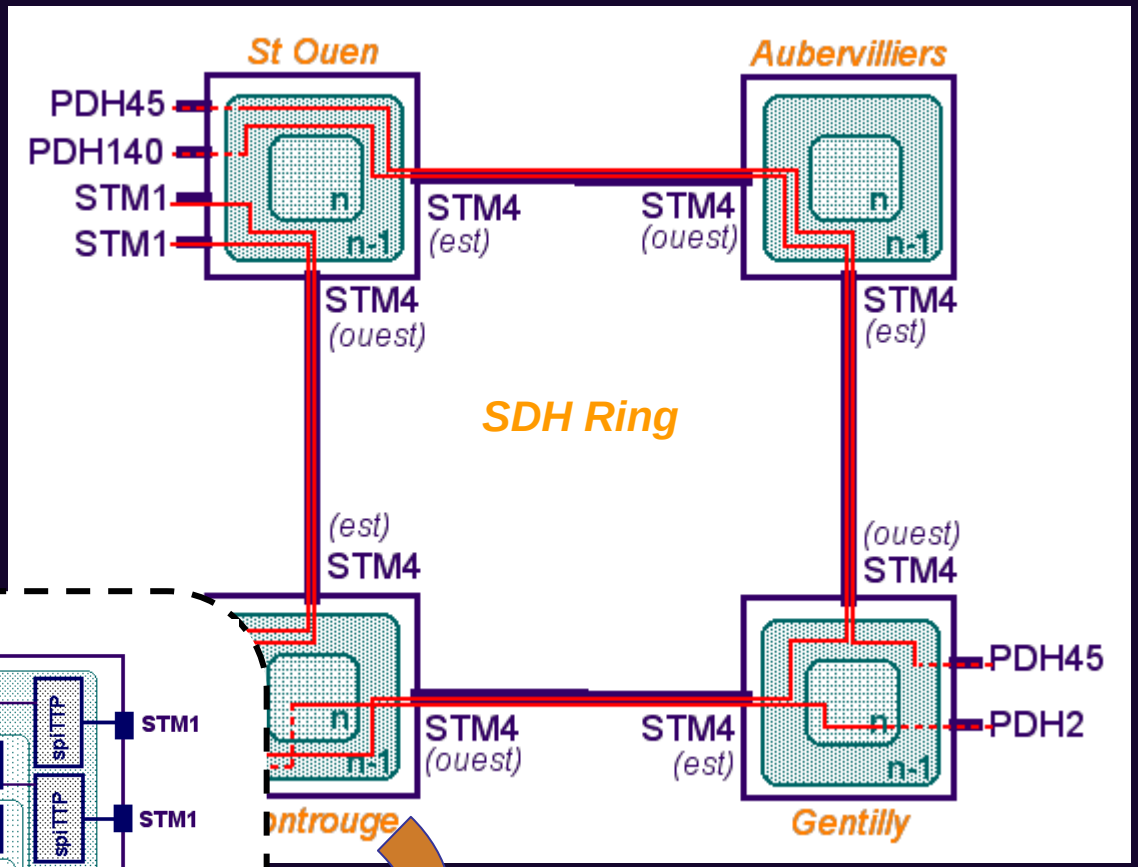

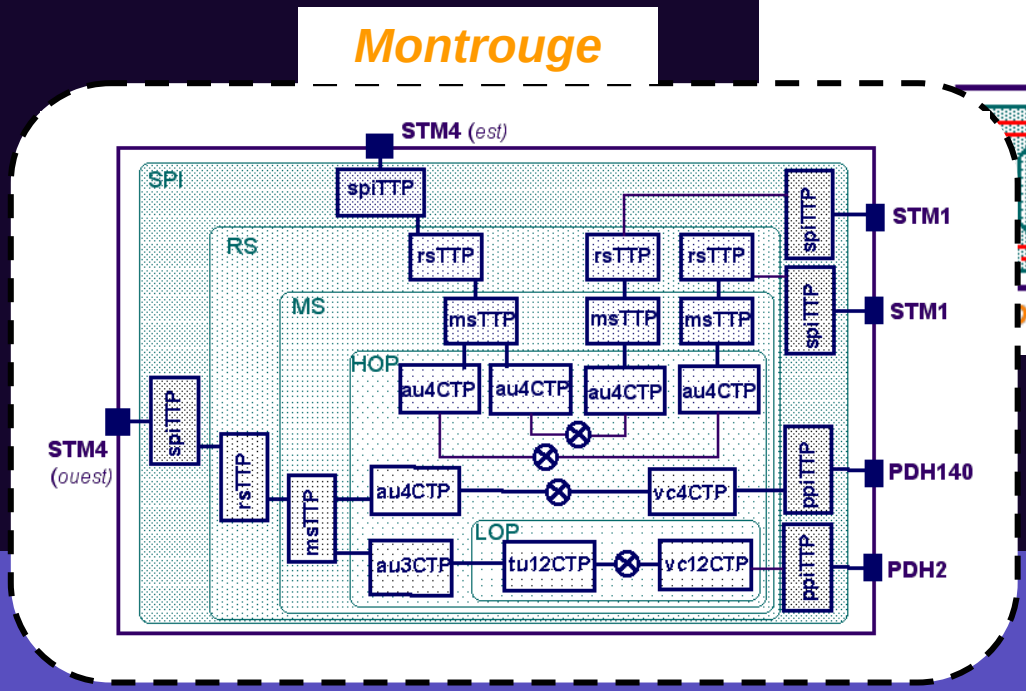

Distributed state inference from alarm observation

- asynchronous network of automata
- distributed supervisors and sensors
- distributed diagnosis: local projection of global diagnosis

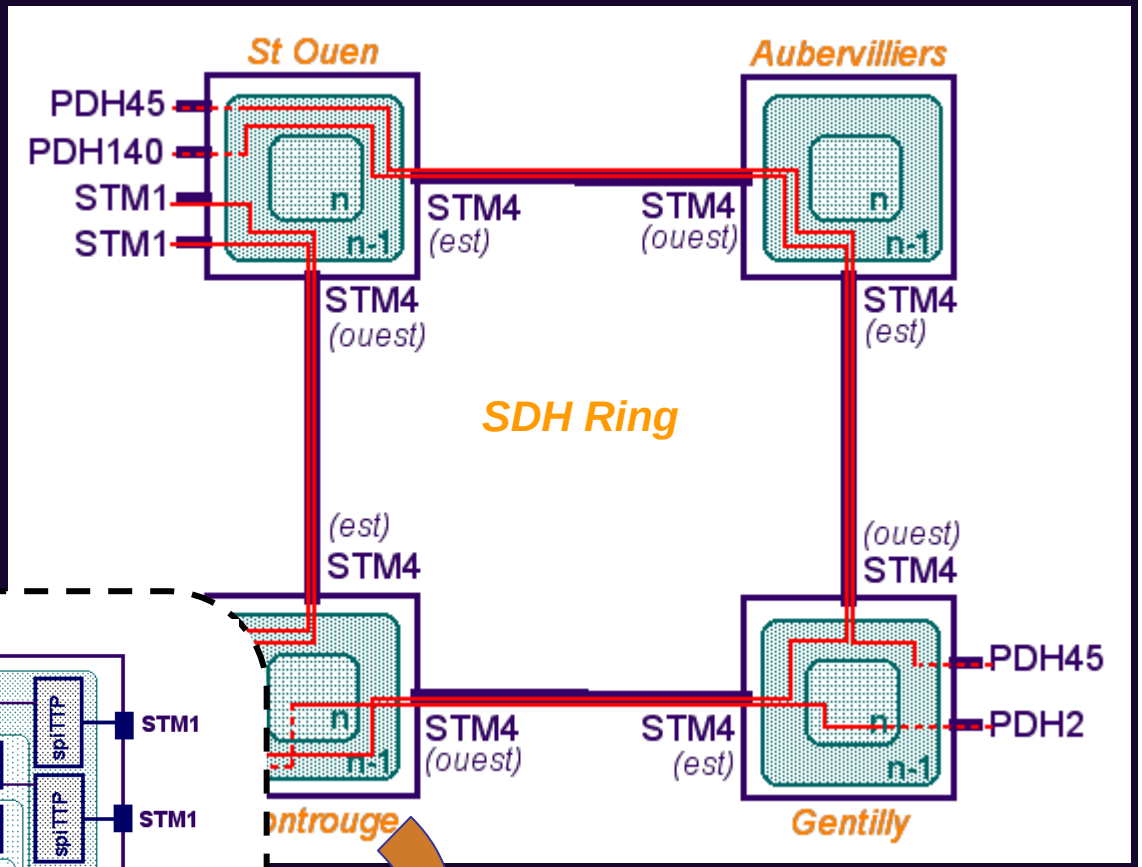

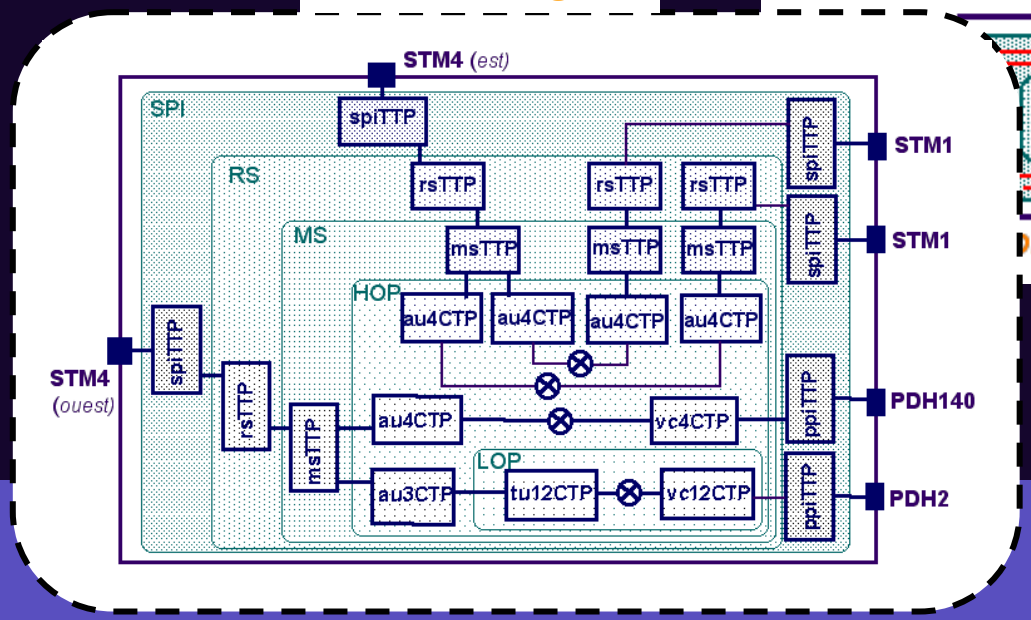

Distributed state inference from alarm observation

- **asynchronous network of automata**
- **distributed supervisors and sensors**
- **distributed diagnosis: local projection of global diagnosis**

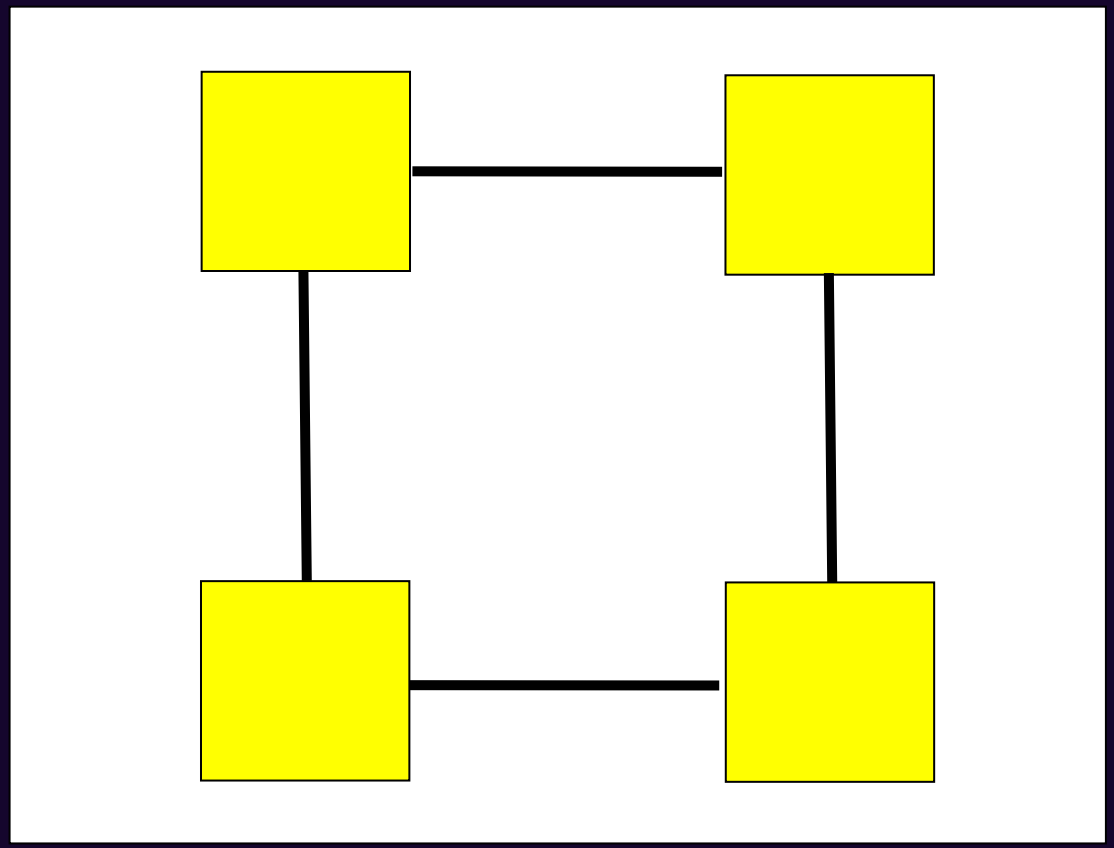

- Fault propagation – causality
- Alarm interleaving – concurrency
- Distributed processing

Distributed state inference from alarm observation

- **asynchronous network of automata**
- **distributed supervisors and sensors**
- **distributed diagnosis: local projection of global diagnosis**

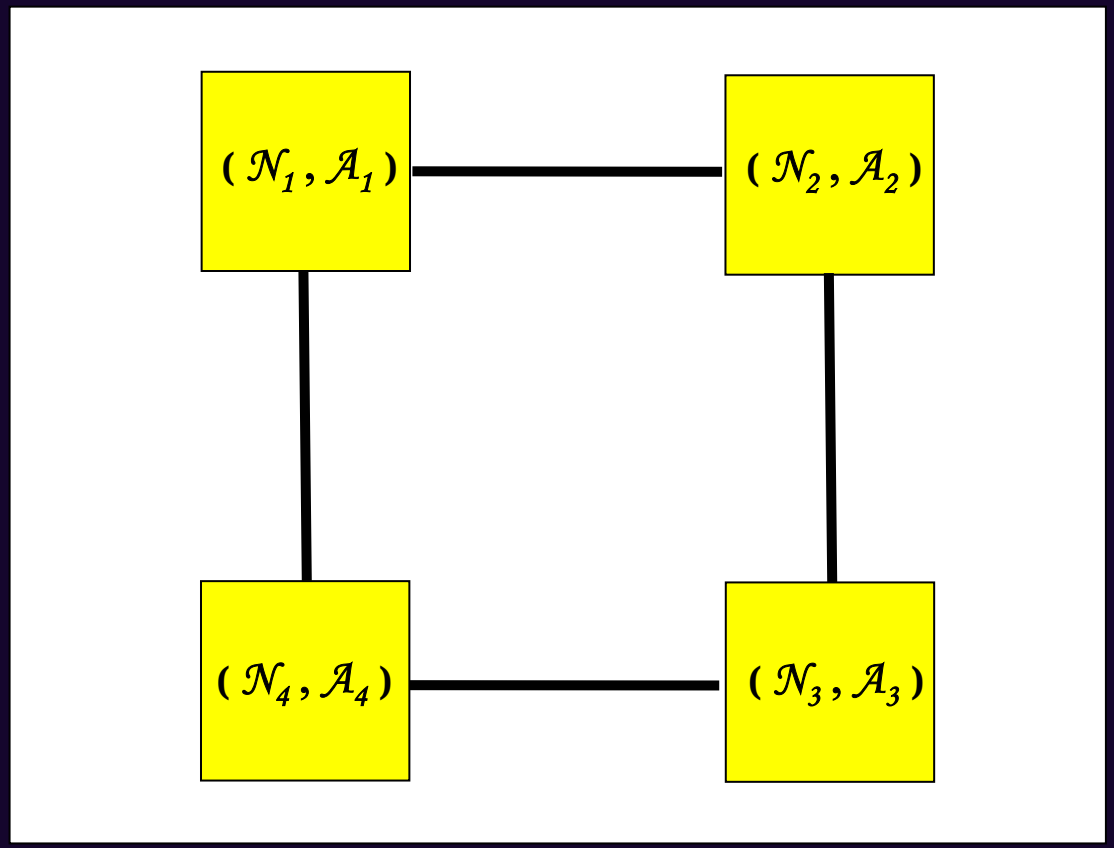

A naïve algorithm:

Each supervisor marks the moves of local automaton with matching alarms and exchanges info with other supervisors

Multi-agent algorithm, tricky to program and impossible to analyse

Distributed state inference from alarm observation

a more algebraic approach

unfold $(\mathcal{N} \times \mathcal{A})$

$\mathcal{N} = \|_i \mathcal{N}_i, \mathcal{A}_i$ **: nets**

distributed and asynchronous algorithm

Winskel's theory of event structures

prove confluence

macros for programming

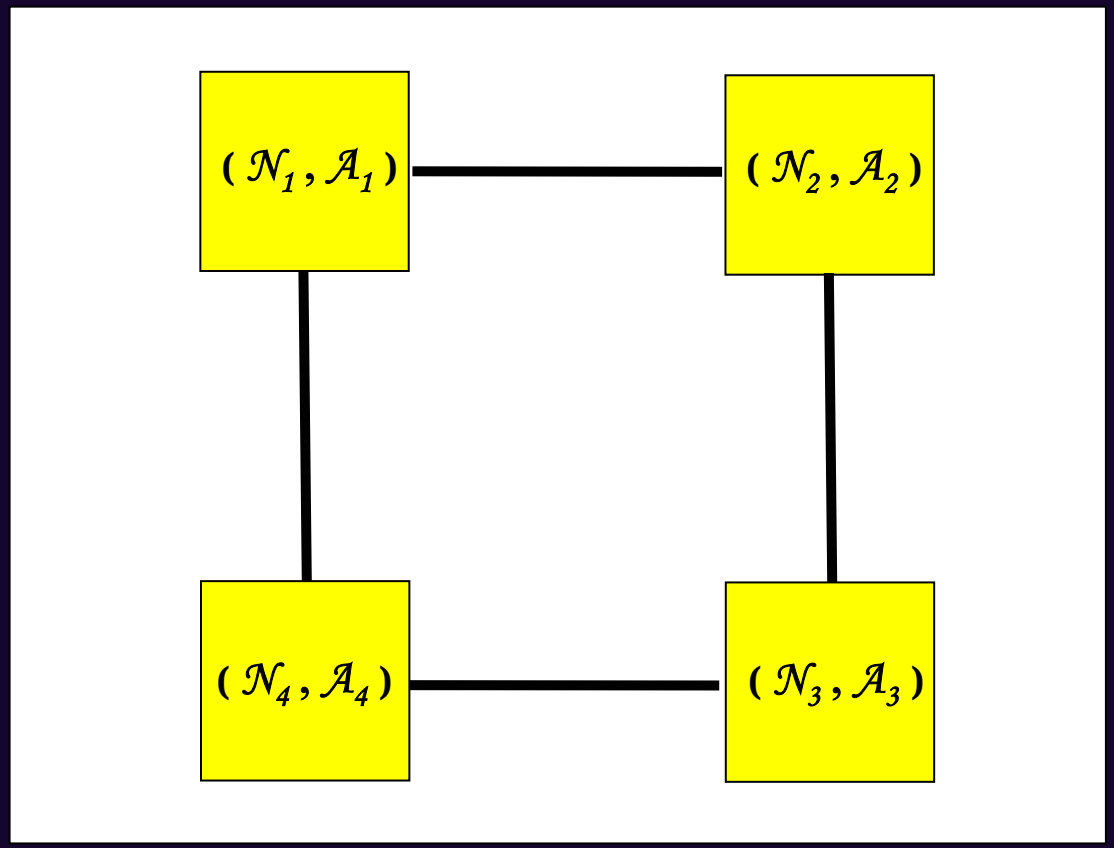

how do we get the model?

cannot be manual (huge)

new concept: self-modeling

Self-modeling, and self-deployment of the algorithm

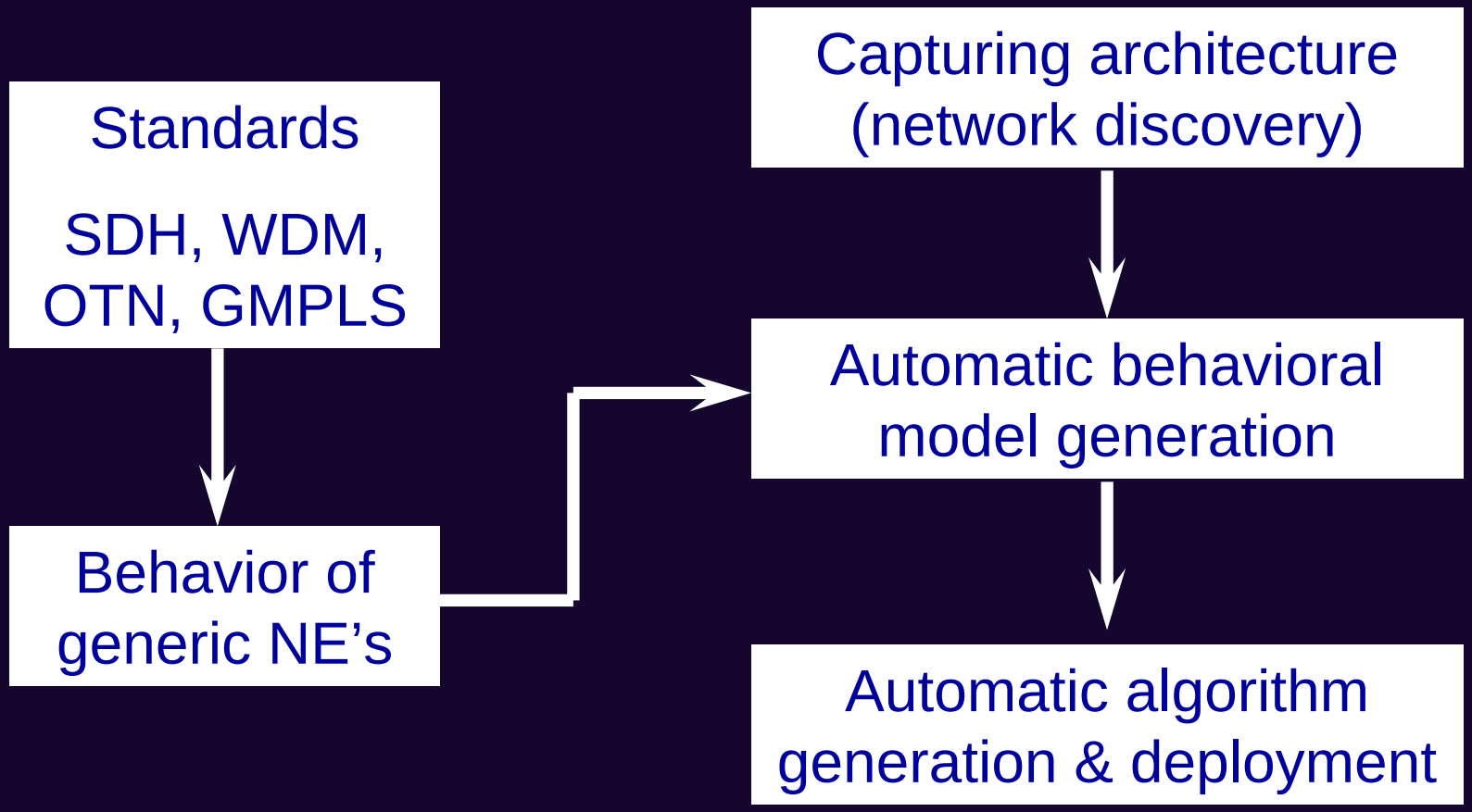

Complete functional architecture – Alcatel / Inria

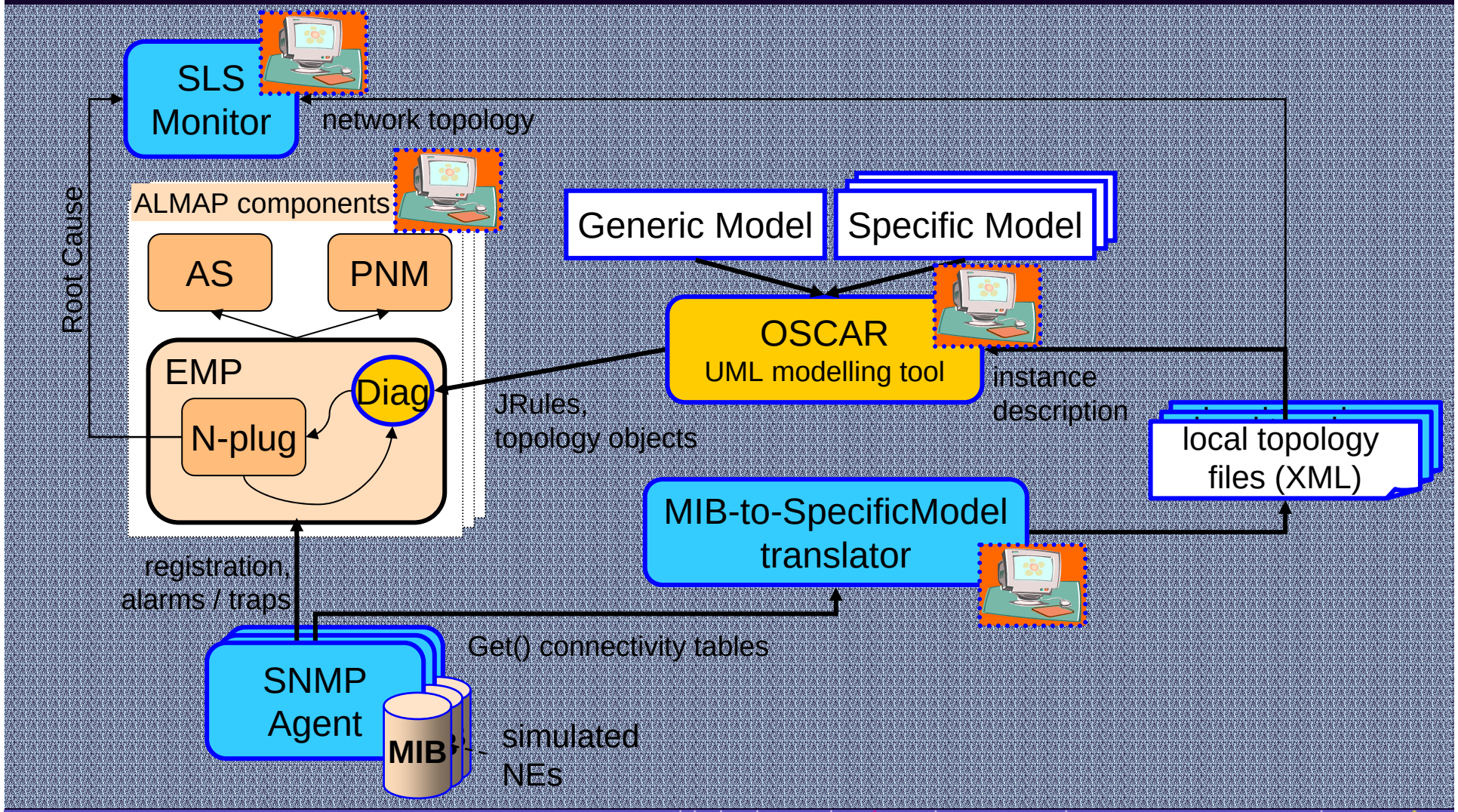

So far…

- Concurrent models:
  - Local states
  - Local time – partially ordered by causality
- Distributed algorithms robust to asynchronous communications
- Self-modeling
- Next steps
  - Dynamic reconfiguration
  - Web services

Web services

- Today: enhancement of Web to allow for access by machines iufhu
- XML as a “universal” syntax ililuiuiugiguguigu iuygciugiugiuguiuiu
- Regarding communications, everything must be made explicit SOAP
- Web services are simple, stateless, remote invocations, best effort semantics – WSDL
- Tomorrow: peer-to-peer infrastructure for global computing and data exchange
- XML documents as universal extensional or intensional data AXML (S. Abiteboul)
- Peer-to-peer infrastructure of activities having states, *cf.* business processes of BPEL4WS
- From “best effort” semantics to a solid one!